CELIKEL™

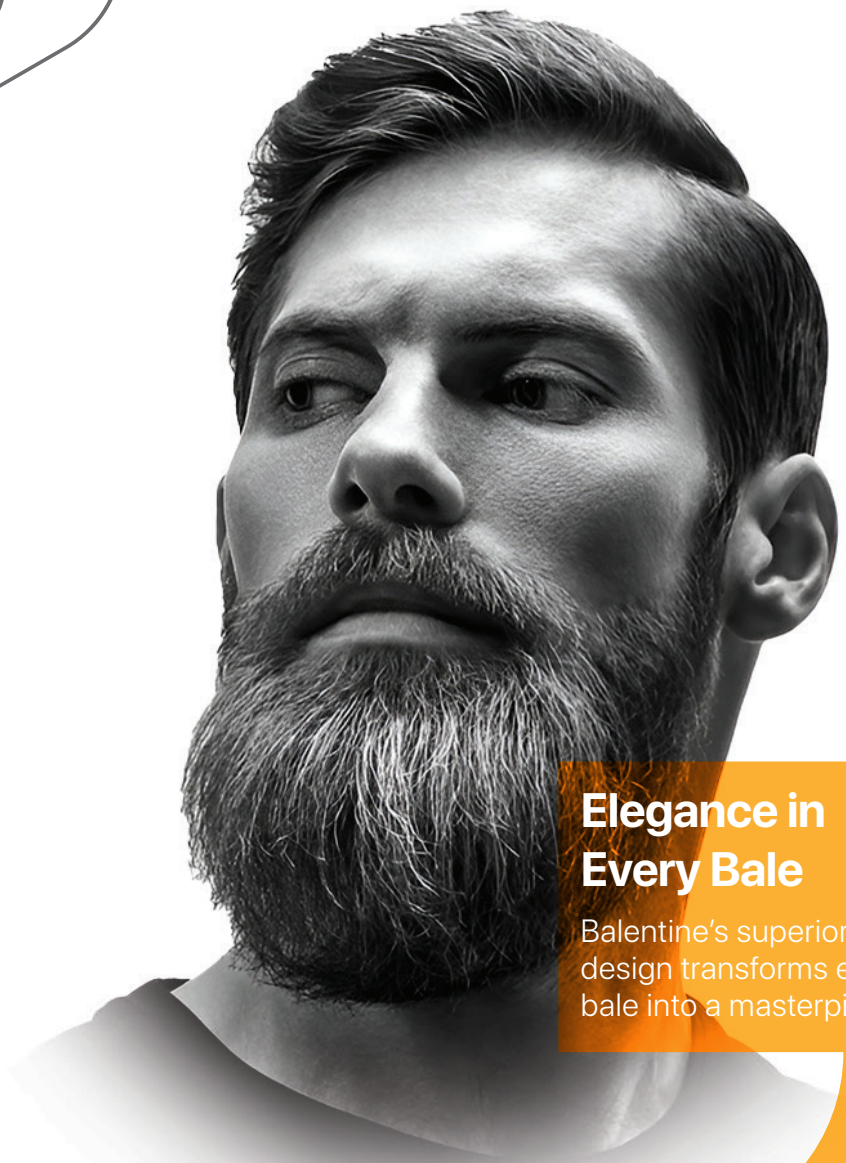

Elegance in Every Bale

Balentine's superior design transforms every bale into a masterpiece.

Balentine

LARGE SQUARE BALERS

the choice of PROFESSIONALS

balentine
Large Square Balers



Balentine is a hay baler machine that can easily work with most farms' 100-120 horsepower tractors in Turkey. This allows farmers to work efficiently with their existing tractors without the need for an extra expensive and large tractor investment. Traditional small hay baler machines have caused labor issues and have been a significant challenge for farmers. However, Balentine 4 eliminates this problem by greatly simplifying the bale loading process with the use of a front loader. This reduces labor issues to a minimum.

The Aesthetic Power of Agriculture, Technical Excellence!

ROTOR AND TINES

The heart of an agricultural machine beats in the rotor and tines, which directly influences its performance. Therefore, the design and material quality of these critical components are a decisive factor in productivity. The rotor and tines, made with Hardox 500 Tough and reinforced steels, demonstrates durability even under the most challenging working conditions for many years.

Specially designed rotor and tines ensure maximum efficiency in each shredding process. This guarantees unique density and evenness in each bale. However, this is just the tip of the iceberg. More compact baling means fewer passes, which translates to time and fuel savings. In the long term, these advantages offered by the rotor and tines result in significant cost savings.

Additionally, the excellent design and superior material quality of this components allow you to extend the overall lifespan of your machine, reducing maintenance and repair costs. In short, the rotor and tines offers the perfect balance between productivity, durability, and cost-effectiveness in the agriculture sector.





The exterior of Balentine is more than just a coating; it's a manifesto for the future of the agriculture sector. Discover the aesthetics and durability of modern agriculture with Çelikel. Thanks to this exterior design, you will not only have a longer-lasting machine but also take a step that enhances your prestige in the industry.

Innovative Exterior Design With Frp

This innovative exterior finish, created by Çelikel's R&D and industrial design engineers, is like a work of art for the industry. It combines aesthetics, durability, and functionality, showcasing that innovation in the agriculture sector goes beyond just the internal mechanics.

This pioneering approach is a clear reflection of a sustainable and forward-looking vision in agriculture. Our efforts represent a significant step in solidifying Çelikel's leadership in the international arena within the agriculture sector.



In conclusion, these transmission and power transfer groups ensure that your agricultural machines are not only longer-lasting but also more durable and efficient in every sense. With this innovation, ÇELİKEL provides a solution that addresses the challenges of modern agriculture.

The specially designed gear group pushes the boundaries of functionality while minimizing energy loss. This allows for top-level efficiency with lower torque requirements. Reinforced components enable machines to operate at high speeds and within a wide power range, thereby increasing the flexibility of your agricultural operations.

Each component is manufactured in compliance with ÇELİKEL's stringent quality standards. This transmission is proof of how our engineering and design capabilities stand out on the international stage.

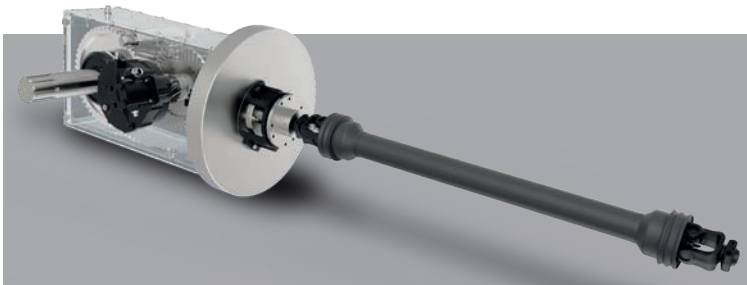

Innovation In Transmission

These power transmission system is a symbol of technical excellence and sustainable performance. ÇELİKEL has created a power transmission system that goes beyond agricultural machinery by combining technological advancements with engineering expertise.



Çelikel's Superior Technology: Innovative Balentine Pick-Up Collection Unit!

Çelikel's years of experience and innovative technology approach come together with this special collection unit, which is the ideal addition to your Balentine machine, allowing you to perform your field tasks more effectively and efficiently.



48 Spring-Actuated Collection Tines

Balentine is specially designed to leave no crop behind in your field during forage collection. This system, where each tine is meticulously placed, collects all crops on the field ground during baling, ensuring maximum efficiency.

Large Work Capacity

With a full 1800 mm wide work capacity, you will have the advantage of working with an unmatched width in your collection processes. Çelikel quality means the opportunity to work in more areas with fewer passes!

Maximum Efficiency Per Unit

With Çelikel's Balentine machine, the field ground remains clean during harvest, which accelerates your preparation process for the next planting season. Increase your yield per unit area by saving both time and energy.

The Balentine pick-up collection unit is a technological marvel that meets the demands of modern agriculture, combining efficiency and quality. Elevate your harvest season to the next level with a product that will more than justify your investment!

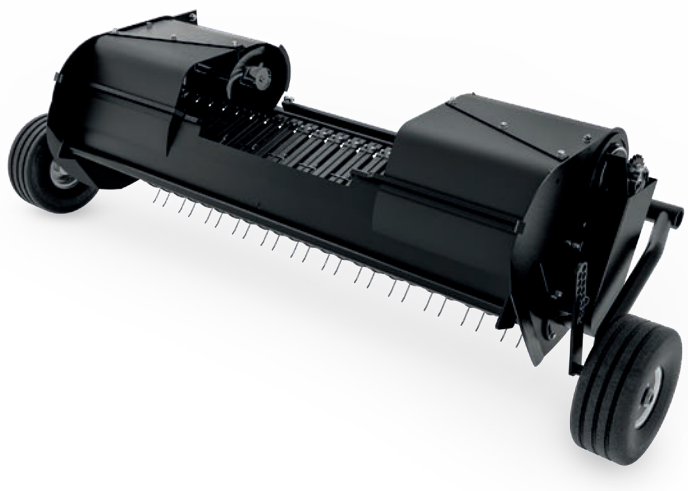

Quality and Durability:
Pick-Up Ring Plastic

The pick-up ring plastic stands out with its special design and high-quality raw materials. Equipped with 24 rings, it ensures quiet operation of the tines and quickly regains its original form in case of potential impacts, thanks to its flexible structure. Moreover, it has a structure that minimizes the potential risk of fire due to friction.

Easy Adjustment:
Height Adjustment Wheels

The height adjustment wheels, which provide the adaptation and comfort you're looking for, quickly adjust the pick-up height even in challenging terrain. They allow the wheels to be positioned either at the front or the rear, both during work and while on the road. Additionally, the pin-locking system enables fast and precise adjustments.





Efficient Feeding:
Feeding Roller

The feeding roller is equipped with a curved horizontal roller located in the pick-up section. This roller grasps the material perfectly, ensuring a smooth and equal flow to the tines. It also evenly adjusts the density of the feed, allowing for the production of bales of equal size and density.

Innovative Design of the Power Transmission

Our state-of-the-art power transmission system, built with an innovative approach, is redefining industry standards. Each gear, chain, and transmission system works in perfect harmony to provide you with uninterrupted performance. Described as the heart of a machine, the power transmission system accurately conveys motion from the transmission to the pick-up unit, plunger, front and the binding group, ensuring maximum efficiency even under the most challenging conditions.

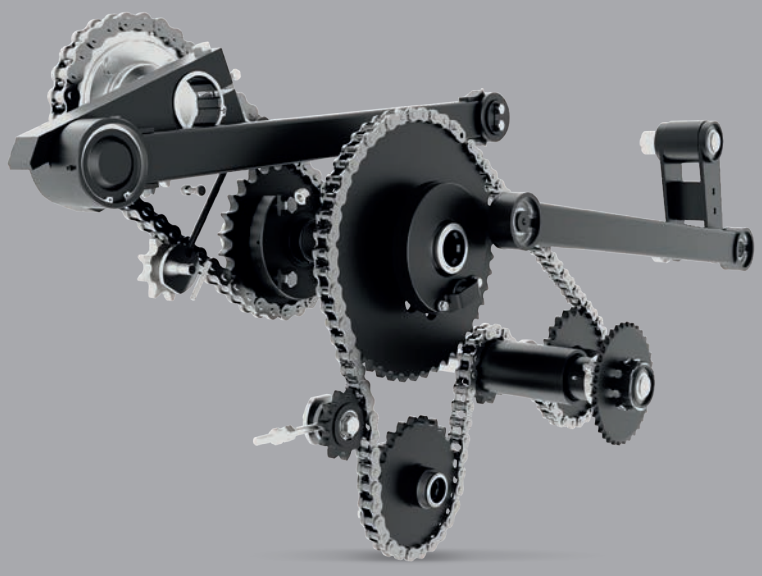



Positioned in a hierarchical structure, these transmission components offer not only functionality but also durability and longevity. Each component is meticulously selected and manufactured to the highest quality standards to provide you with an excellent working experience. Feel the superior technology and engineering prowess offered by this power transmission group in every movement of your machine. This is a true engineering marvel that combines performance and reliability! Experience the difference of this innovative design and become a BALENTINE owner today!





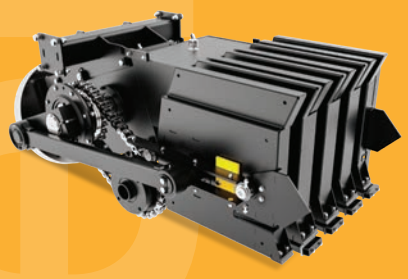

Balanced and Secure

Every terrain is a playground for Balentine! With its robust chassis and axle group, it achieves top-level mobility and balance. The wide sidewalls of the 16.0/70-20 tires maximize suspension while preventing sinking on soft ground. Thanks to these features, Balentine not only offers a quiet ride but also considers your wallet with low fuel consumption. Powerful and economical - that's the difference with Balentine!

Exceptional Baling Performance: Balentine's Bale Chamber and Plunger

No matter how challenging the terrain conditions may be, Balentine's engineering marvel of a baling chamber and plunger is always by your side. Thanks to the excellent combination of Hardox 500 Tuf, S355, S235, S275, and 5630 materials, it delivers maximum performance even in the toughest tasks. With a 50% chopping capacity on long crops, it creates a new revolution in baling, raising the standard of agriculture with its dense and even packaging feature.

High Safety Standards: Free Reverse Safety Clutch

To extend the life of your machine and protect its performance, Balentine provides extra protection against sudden torque loads with its clutch section. Additionally, its free reverse section acts as an excellent safety measure, preventing potential impacts of the flywheel when the tractor is stopped or its turning speed is reduced.



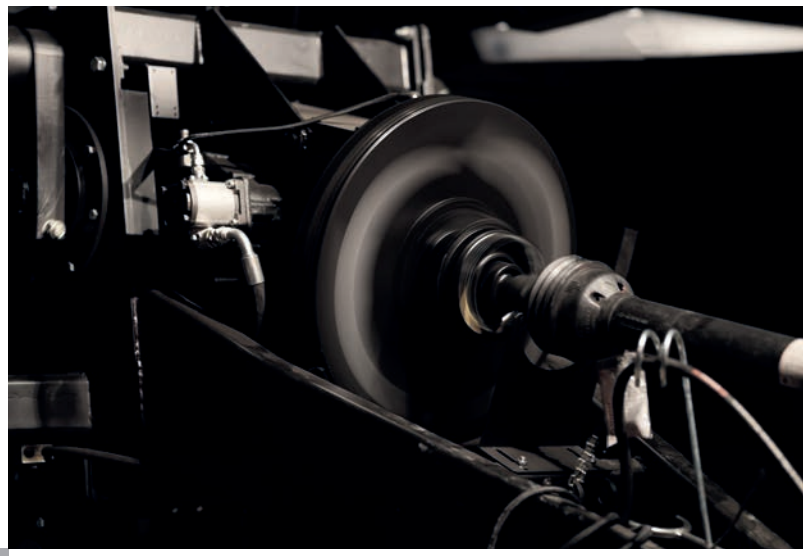

Automation System: The Future of Agriculture in Your Hands Now!

Imagine a 10-inch crystal-clear touchscreen tablet that allows you to have complete control over your automation. With a specially designed, water and dust-resistant construction, it delivers perfect performance even in the harshest weather conditions. You won't experience any interruptions, thanks to the durable and long-lasting cable arrangements designed especially for challenging agricultural conditions. But the real revolution lies within the software it contains. With its eye-catching animations, it not only makes your automation processes more efficient but also turns them into an aesthetic experience. By watching in real-time the moment each bale is dropped with the standard camera system, you have full control at your fingertips. The BALENTINE automation infrastructure brings efficiency and aesthetics together in your work, inviting you to the future of agriculture!

Flywheel Power for Maximum Performance

Balentine's specially designed flywheel ensures the smooth operation of the machines even in the most challenging conditions. With a diameter of 645 mm and a weight of 195 kilograms, this flywheel provides the machine with extra torque and serves as a powerful energy source, allowing even irregularly prepared crops to be baled easily.

Superior Maneuverability: Shaft

To ensure perfect compatibility between your baler and your tractor, the Balentine shaft (drive shaft) is equipped with a wide-angle working feature. This provides a mobility of up to 80° even in hilly, bumpy, and winding terrain conditions. As a result, your machine and tractor are maximally protected during sudden movements and turns, minimizing potential damage to the tailshafts.

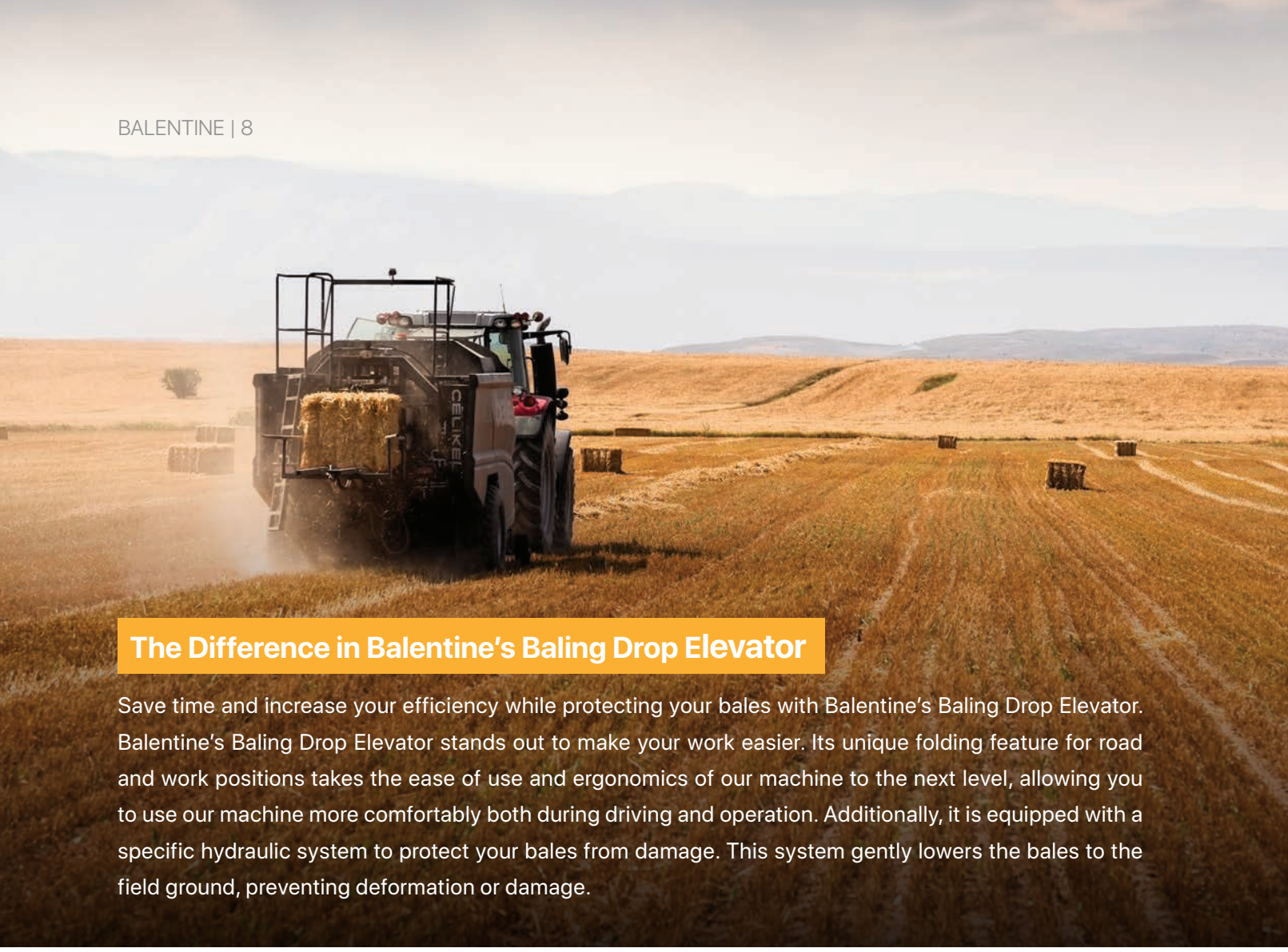

The Difference in Balentine's Baling Drop Elevator

Save time and increase your efficiency while protecting your bales with Balentine's Baling Drop Elevator. Balentine's Baling Drop Elevator stands out to make your work easier. Its unique folding feature for road and work positions takes the ease of use and ergonomics of our machine to the next level, allowing you to use our machine more comfortably both during driving and operation. Additionally, it is equipped with a specific hydraulic system to protect your bales from damage. This system gently lowers the bales to the field ground, preventing deformation or damage.

The Unique Quality of the Rasspe Binding Group in Balentine!

At Balentine, we always want you to feel the difference in the quality and performance we offer. That's why we choose the Rasspe binding group, which is frequently mentioned in the industry.

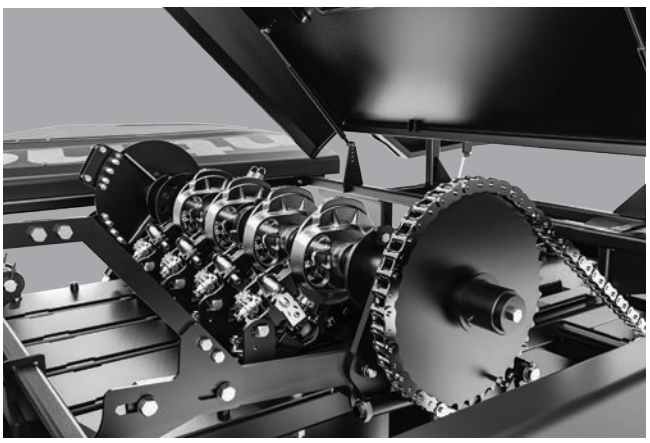

With the pin-cut safety system, Rasspe ensures that your machines always operate under maximum safety. This not only ensures the user's safety but also contributes to the longevity of your machines. With its adjustable features, it offers flexibility to work with different twines. This allows you to easily and comfortably choose the option that best suits your needs. It creates the strongest knots with improved mechanical knotting ability, greatly reducing the risk of twine unraveling or breaking, providing a seamless working experience. Balentine will never leave you halfway when it comes to quality and durability. Experience the unique quality of the Rasspe Binding Group with Balentine and feel the difference!

balentine

SAME BLOOD
NEW SPIRIT

TECHNICIAL SPECIFICATIONS	BALENTINE
Length	8320 mm
Height	3085 mm
Width	2650 mm
Wheel Track Width	1950 mm
Weight	5200 kg
PTO Power Requirement	100-150 hp
PTO Speed Requirement	1000 rpm
Piston Stroke Rate	52 /min
Average Bales per Hour	40-50 bales
Tyre Size	16/70-20
Pick-up Tyre Size	15/6.00-6
Pick-up Working Width	1800 mm
Pick-up Tine Count	48 pcs
Bale Dimensions	700x800x1000-2500 mm
Tying Type	Single Knot
Number of Tying Twines	4 pcs
Knotter Group Fan Count	3 pcs
Twine Storage Cabinet Capacity	16 pcs
Automatic Bale Unloading System	Standard
Integrated Hydraulic System	Standard
Mechanical Support Jack	Standard
Tying Safety System	Standard
Needle Safety System	Standard
Flywheel Safety System	Standard
Last Bale Ejection System	Standard
Digital Control System	Standard
Wide-Angle Shaft	Standard
Ladder	Standard

You can review Çelikel's other product groups and details on our website.

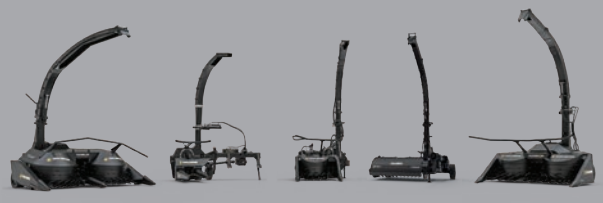

Silage Machines



Silage Spreader & Compactor

Packaging Machines



Vertical Feed Mixers



Horizontal Feed Mixers



Large Square Balers



Manure Management Machines



Silage Baler & Packaging Machine
Cotton Baler & Packaging Machine



Feed Production System

Experience, Dedication, and a Global Vision. Join Us!

We share values of quality, trust, and growth with our partners.

Are you interested? Let's talk!
Partnership today. Leadership tomorrow.

NEXT LEVEL
Partner with us today!

Büyükkayacık O.S.B. Mah. Vali İhsan Dede Cad.
No:2 42250 Selçuklu, Konya, Turkey
+90 850 305 42 66 | www.celikel.eu

the choice of PROFESSIONALS

Copyright© 2023 Çelikel Tarım A.Ş. Türkiye

This catalog is published by Steve BRANDSON. All rights to names, brands, and concepts are owned by Çelikel Tarım A.Ş. Any text or section cannot be reproduced without the permission of Çelikel Tarım A.Ş. All trademark rights for Çelikel's name and logo are owned by Çelikel Tarım A.Ş. All rights to the texts, photographs, maps, illustrations, and topics published in the catalog are reserved. Quoting, even with attribution, is not allowed without permission.